

345012M

14x18更換式扭力扳手接頭 (開口型)

- 鍍鉻
- 開口型

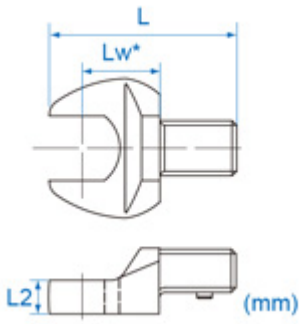

Item	Size	Maximum Torque Nm	L2	Lw* (mm)	L (mm)	g	
34501213M	13	52	7.0	25	57.5	114	12 / 192
34501214M	14	64	7.0	25	58	115	12 / 192
34501215M	15	77	7.0	25	58	118	12 / 192
34501216M	16	93	7.0	25	58.5	125	10 / 160
34501217M	17	110	9.0	25	59.5	135	10 / 160
34501218M	18	130	9.0	25	60	134	10 / 160
34501219M	19	150	9.0	25	60.5	136	10 / 160
34501221M	21	198	11.0	25	61	153	6 / 96

Item	Size	Maximum Torque Nm	L2	Lw* (mm)	L (mm)	g	
34501222M	22	225	11.0	25	62	158	6 / 96
34501223M	23	255	11.0	25	63.1	166	6 / 96
34501224M	24	287	11.0	25	63.1	163	6 / 96
34501225M	25	322	11.0	25	69	162	6 / 96
34501226M	26	359	13.8	30	69	230	6 / 96
34501227M	27	400	13.8	32.5	69	239	6 / 96
34501230M	30	537	13.8	32.5	70.6	239	6 / 96
34501232M	32	644	13.8	32.5	72.1	248	6 / 72
34501234M	34	762	13.8	32.5	73.2	248	6 / 72
34501236M	36	800	13.8	32.5	73.3	244	6 / 72
34501238M	38	800	13.8	32.5	72.7	222	6 / 72
34501240M	40	800	13.8	37	80.5	321	6 / 72
34501241M	41	800	13.8	37	80.5	315	6 / 72
34501246M	46	800	20.0	50	91.1	624	4 / 36