

8330M

1" DR. 公制十二角標準套筒

— 鉻釩合金鋼，拋光，鍍鉻

— 依據 DIN 3124, ISO 2725-1

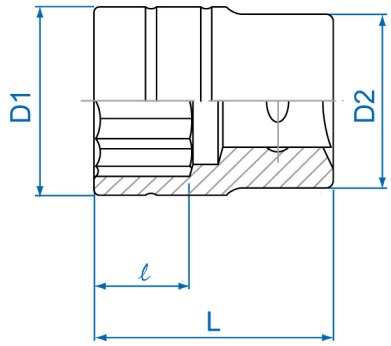

Item	mm	D1 mm	D2 mm	ℓ mm	L (mm)	g	
833036M	36	52	48	26	65	514	1 / 24
833038M	38	54	48	26	65	536	1 / 24
833041M	41	58	50	29	70	659	1 / 24
833046M	46	65	54	32	75	961	1 / 24
833050M	50	70	54	34	75	985	1 / 10
833054M	54	74	57	38	80	1164	1 / 10
833055M	55	76	57	42	83	1256	1 / 12
833058M	58	79	57	42	83	1264	1 / 12

Item	○ mm	D1 mm	D2 mm	ℓ mm	L (mm)	g	
833060M	60	82	58	46	87	1488	1 / 12
833063M	63	86	58	46	87	1548	1 / 12
833065M	65	88	65	49	90	1817	1 / 12
833067M	67	91	70	49	91	1932	1 / 12
833070M	70	94	70	50	93	2064	1 / 8
833071M	71	95	70	50	93	2026	1 / 8
833075M	75	100	70	50	95	2168	1 / 8
833077M	77	103	80	52	100	2732	1 / 8
833080M	80	107	80	52	100	3009	1 / 8