

6335M

3/4" DR. 公制六角標準套筒

- 鉻釩合金鋼，拋光，鍍鉻
- 4球槽定位功能
- 依據 DIN 3124, ISO2725-1

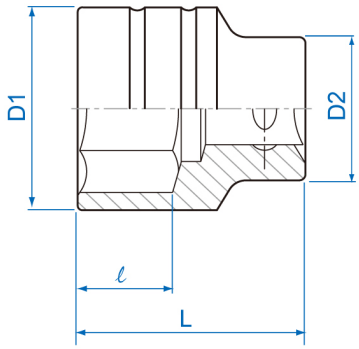

Item	mm	D1 mm	D2 mm	ℓ mm	L (mm)	g	
633517M	17	26.0	32.7	14	51	147	8 / 96
633518M	18	28.0	32.7	14	51	155	8 / 96
633519M	19	30.0	32.7	14	51	168	8 / 96
633520M	20	31.0	32.7	16	51	169	8 / 96
633521M	21	32.0	32.7	16	51	173	8 / 96
633522M	22	33.0	35.7	16	51	208	8 / 96
633523M	23	34.0	35.7	16	51	211	8 / 96
633524M	24	35.0	35.7	17	51	216	8 / 96

Item	mm	D1 mm	D2 mm	ℓ mm	L (mm)	g	
633525M	25	35.0	35.7	17	52	211	8 / 96
633526M	26	35.7	35.0	17	52	199	8 / 96
633527M	27	38.0	36.0	19	52	226	8 / 96
633528M	28	39.0	36.0	19	52	230	8 / 96
633529M	29	40.0	38.0	19	52	252	8 / 96
633530M	30	42.0	38.0	21	54	287	6 / 48
633531M	31	43.0	38.0	23	55	295	6 / 48
633532M	32	44.0	38.0	23	56	308	6 / 48
633533M	33	46.0	39.0	23	56	345	6 / 48
633534M	34	47.0	42.0	24	57	392	6 / 48
633535M	35	48.0	42.0	25	58	403	6 / 36
633536M	36	50.0	42.0	25	58	438	6 / 36
633537M	37	51.0	45.0	25	59	471	6 / 36
633538M	38	52.0	45.0	27	60	491	6 / 36
633539M	39	53.0	45.0	28	61	499	4 / 32
633540M	40	54.0	45.0	28	62	512	4 / 32
633541M	41	56.0	45.0	29	64	571	4 / 32
633542M	42	57.0	45.0	29	64	573	4 / 32
633543M	43	58.0	45.0	29	65	591	4 / 32
633544M	44	60.0	48.0	31	66	689	4 / 32
633545M	45	61.0	48.0	33	67	687	4 / 32

Item	mm	D1 mm	D2 mm	ℓ mm	L (mm)	g	
633546M	46	62.0	48.0	33	68	708	4 / 32
633547M	47	63.0	48.0	33	69	729	4 / 32
633548M	48	64.0	48.0	34	70	708	2 / 24
633549M	49	66.0	48.0	34	70	808	2 / 24
633550M	50	68.0	48.0	34	72	891	2 / 24
633551M	51	69.0	50.0	35	73	911	1 / 20
633552M	52	69.0	50.0	35	73	873	1 / 20
633553M	53	70.0	50.0	35	74	904	1 / 20
633554M	54	72.0	50.0	35	75	968	1 / 20
633555M	55	74.0	50.0	37	76	1025	1 / 20
633557M	57	76.0	50.0	37	76	1017	1 / 20
633558M	58	77.0	50.0	37	78	1067	1 / 20
633559M	59	78.0	50.0	37	78	1127	1 / 20
633560M	60	80.0	50.0	40	78	1145	1 / 20
633562M	62	82.0	55.0	40	81	1258	1 / 12
633563M	63	83.0	55.0	40	81	1304	1 / 12
633564M	64	84.0	55.0	40	81	1300	1 / 12
633565M	65	85.0	58.0	43	83	1422	1 / 12
633570M	70	92.0	58.0	46	88	1800	1 / 12