

9535S

1-1/2" DR. 英制六角氣動標準套筒

- 鉻鉬合金鋼
- 表面處理：磷酸錳
- 依據ANSI/ASME B107.1

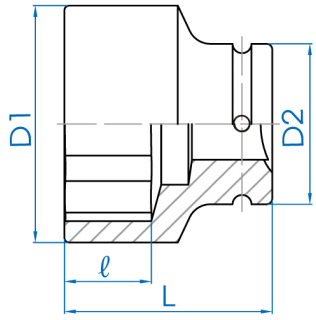

Item	inch	D1 mm	D2 mm	ℓ mm	L (mm)	g	
953564S	2	81	86	35	85	2305	1 / 6
953566S	2-1/16	82	86	36	85	2364	1 / 6
953568S	2-1/8	84	86	36	90	2508	1 / 6
953570S	2-3/16	85	86	43	93	3204	1 / 6
953572S	2-1/4	87	86	43	93	5209	1 / 6
953574S	5-5/16	89	86	43	93	2560	1 / 6
953576S	2-3/8	90	86	45	95	2622	1 / 6

Item	inch	D1 mm	D2 mm	ℓ mm	L (mm)	g	
953578S	2-7/16	93	86	44	95	2711	1 / 6
953580S	2-1/2	95	86	46	97	2833	1 / 6
953582S	2-9/16	96	86	49	100	2863	1 / 6
953584S	2-5/8	99	86	48	100	2958	1 / 6
953586S	2-11/16	101	86	48	100	3055	1 / 6
953588S	2-3/4	103	86	48	103	3217	1 / 6
953590S	2-13/16	105	86	50	105	3306	1 / 6
953592S	2-7/8	107	86	50	105	3600	1 / 6
953594S	2-15/16	108	86	50	105	3455	1 / 6
953596S	3	111	86	50	105	3590	1 / 4
953598S	3-1/16	114	86	52	105	3931	1 / 4
9535A0S	3-1/8	116	86	53	105	4123	1 / 4
9535A2S	3-3/16	118	86	53	105	4089	1 / 4
9535A4S	3-1/4	120	86	54	105	4829	1 / 4
9535A6S	3-5/16	122	86	56	105	4207	1 / 4
9535A8S	3-3/8	123	86	56	105	4306	1 / 4
9535B0S	3-7/16	125	86	57	105	4256	1 / 4
9535B2S	3-1/2	129	86	60	110	4905	1 / 4
9535B4S	3-9/16	130	86	60	110	5435	1 / 4
9535B6S	3-5/8	131	86	60	110	4894	1 / 4
9535B8S	3-11/16	133	86	62	113	5468	1 / 1

Item	inch	D1 mm	D2 mm	ℓ mm	L (mm)	g	
9535C0S	3-3/4	136	127	62	113	3741	1 / 1
9535C2S	3-13/16	138	127	64	120	9098	1 / 1
9535C4S	3-7/8	139	127	66	120	8954	1 / 1
9535C6S	3-15/16	140	127	66	120	8931	1 / 1
9535C8S	4	142	127	66	120	7886	1 / 1
9535D0S	4-1/16	143	127	68	120	7843	1 / 1
9535D2S	4-1/8	146	127	68	120	8003	1 / 1
9535D4S	4-3/16	146	127	70	120	7851	1 / 1
9535D6S	4-1/4	150	127	72	124	8385	1 / 1
9535D8S	4-5/16	154	127	72	124	8973	1 / 1
9535E0S	4-3/8	155	127	72	124	8923	1 / 1
9535E2S	4-7/16	155	127	75	128	9033	1 / 1
9535E4S	4-1/2	159	127	75	128	9258	1 / 1
9535E8S	4-5/8	164	127	79	132	13730	1 / 1
9535F2S	4-3/4	167	127	79	132	10386	1 / 1
9535F6S	4-7/8	171	127	79	136	10930	1 / 1
9535G0S	5	174	127	79	140	11338	1 / 1
9535G4S	5-1/8	180	127	80	143	12279	1 / 1
9535G8S	5-1/4	184	127	80	145	12728	1 / 1
9535J2S	6	203	127	85	165	14270	1 / 1