

3335S

3/8" DR. 英制六角標準套筒

- 鉻釩合金鋼，拋光，鍍鉻
- 4球槽定位功能
- 依據 ANSI/ASME B107.1

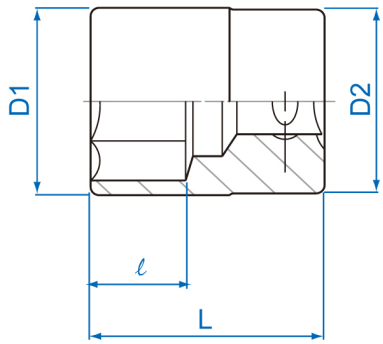

Item	inch	D1 mm	D2 mm	ℓ mm	L (mm)	g	
333508S	1/4	10.0	17.8	7.0	27	24	12 / 360
333510S	5/16	12.0	17.8	7.0	27	25	12 / 360
333511S	11/32	13.2	17.8	7.0	27	24	12 / 360
333512S	3/8	14.0	17.8	9.0	27	25	12 / 360
333514S	7/16	15.8	17.8	9.0	27	25	12 / 360
333515S	15/32	16.8	17.8	9.0	27	27	12 / 360
333516S	1/2	17.8	16.8	9.0	27	26	12 / 360
333518S	9/16	19.7	18.0	11.0	29	32	10 / 300

Item	inch	D1 mm	D2 mm	ℓ mm	L (mm)	g	
333519S	19/32	20.8	18.0	11.0	29	35	10 / 300
333520S	5/8	21.8	20.0	11.0	29	43	10 / 300
333522S	11/16	23.8	20.0	11.0	29	48	10 / 200
333524S	3/4	25.7	21.0	13.0	29	51	10 / 200
333526S	13/16	27.8	25.0	13.0	32	83	10 / 160
333528S	7/8	29.6	26.0	15.0	32	89	10 / 160
333530S	15/16	31.8	26.0	17.0	34	86	8 / 160
333532S	1	33.8	26.0	17.0	34	101	8 / 160