

3335M

3/8" DR. 公制六角標準套筒

- 鉻釩合金鋼，拋光，鍍鉻
- 4球槽定位功能
- 依據 DIN 3124, ISO 2725-1

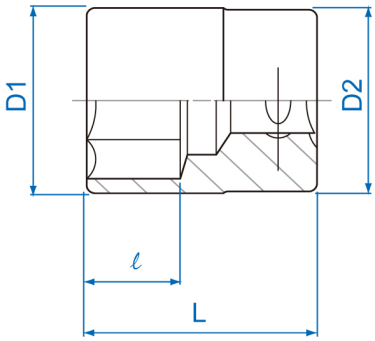

Item	mm	D1 mm	D2 mm	ℓ mm	L (mm)	g	
333506M	6	9.9	17.8	7.0	27	25	12 / 360
333507M	7	10.8	17.8	7.0	27	24	12 / 360
333508M	8	12.0	17.8	7.0	27	26	12 / 360
333509M	9	13.2	17.8	7.0	27	25	12 / 360
333510M	10	14.5	17.8	9.0	27	28	12 / 360
333511M	11	15.8	17.8	9.0	27	27	12 / 360
333512M	12	16.8	17.8	9.0	27	28	12 / 360
333513M	13	17.8	16.8	9.0	27	26	12 / 360

Item	mm	D1 mm	D2 mm	ℓ mm	L (mm)	g	
333514M	14	19.7	18.0	11.0	29	35	10 / 300
333515M	15	20.8	18.0	11.0	29	39	10 / 300
333516M	16	21.8	20.0	11.0	29	43	10 / 300
333517M	17	23.8	20.0	11.0	29	50	10 / 200
333518M	18	24.7	21.0	13.0	29	51	10 / 200
333519M	19	25.8	21.0	13.0	29	53	10 / 200
333520M	20	27.1	25.0	13.0	32	87	10 / 160
333521M	21	27.8	25.0	13.0	32	82	10 / 160
333522M	22	29.7	26.0	15.0	32	89	10 / 160
333523M	23	29.7	26.0	15.0	32	84	10 / 160
333524M	24	31.8	26.0	17.0	32	94	8 / 160