

2330M

1/4" DR. 12 Point Metric Standard Socket

- 12 pt. bi-hex socket
- Chrome vanadium alloy steel, polished, chrome plated.
- 4 ball retaining grooves.
- DIN 3124, ISO 2725-1

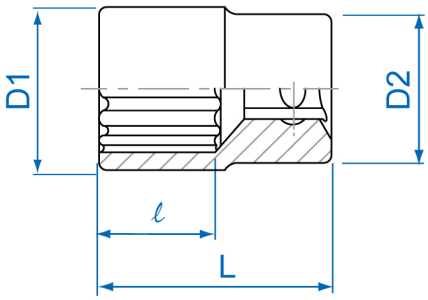

Item	mm	D1 mm	D2 mm	ℓ mm	L (mm)	g	
233004M	4	6.8	11.8	4	24	9	20 /600
233045M	4.5	7.4	11.8	5	24	9	20 /600
233005M	5	8.0	11.8	6	24	9	20 /600
233055M	5.5	8.7	11.8	6	24	11	20 / 600
233006M	6	9.2	11.8	7	24	11	20 / 600
233007M	7	10.3	11.8	7	24	10	20 /600

Item	○ mm	D1 mm	D2 mm	ℓ mm	L (mm)	g	
233008M	8	11.4	11.8	8	24	12	20 / 600
233009M	9	12.8	12.0	8	24	12	20 /600
233010M	10	14.3	13.0	9	24	13	12 / 360
233011M	11	15.8	14.2	9	24	18	12 /360
233012M	12	16.8	15.5	9	24	21	12 / 360
233013M	13	17.8	16.5	9	24	23	12 / 360
233014M	14	19.6	18.5	9	24	31	10 /360