

1991

Wheel Nut Wrench

- Chrome vanadium alloy steel
- For most car wheel nuts in metric
- Polished, chrome plated
- DIN 3119 ISO 6788

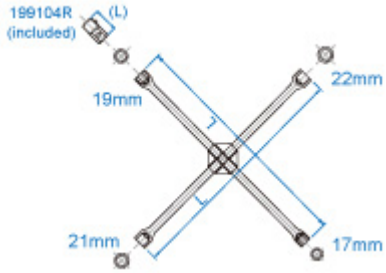

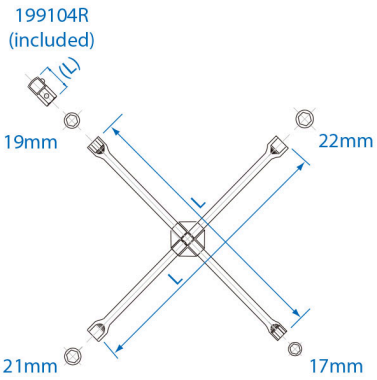

Item	mm	inch	L (mm)	g	
19911722	17 , 19 , 21 , 22	1/2"	400	1700	6
199104R	19	1/2”	34	84	10 / 240