

345011M

9x12 Open Ended Insert Tool

— Chrome-plated

— Open ended Insert Tool

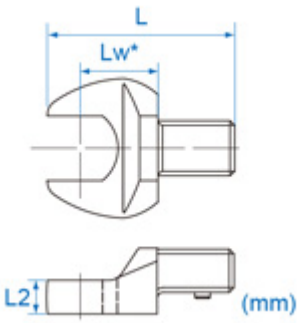

Item	Size	Maximum Torque Nm	L2	Lw* (mm)	L (mm)	g	
34501107M	7	10	5.7	17.5	37.4	36	12 / 192
34501108M	8	13	5.7	17.5	37.9	38	12 / 192
34501109M	9	19	5.7	17.5	37.9	38	12 / 192
34501110M	10	25	5.7	17.5	38.2	41	12 / 192
34501111M	11	33	5.7	17.5	39.0	39	12 / 192
34501112M	12	42	5.7	17.5	39.0	41	12 / 192
34501113M	13	52	5.7	17.5	39.3	44	12 / 192
34501114M	14	64	7.7	20	43.1	54	12 / 192

Item	Size	Maximum Torque Nm	L2	Lw* (mm)	L (mm)	g	
34501115M	15	77	7.7	20	43.4	58	12 / 192
34501116M	16	93	7.7	20	43.9	57	12 / 192
34501117M	17	110	7.7	20	44.4	61	12 / 192
34501118M	18	130	7.7	20	45.3	62	12 / 192
34501119M	19	150	7.7	20	45.0	66	12 / 192
34501121M	21	198	11.5	25	52.4	118	10 / 160
34501122M	22	225	11.5	25	53.1	124	10 / 160
34501124M	24	287	11.5	25	54.1	128	8 / 128
34501127M	27	400	13.0	32.5	60.1	198	8 / 128
34501130M	30	537	13.5	32.5	60.9	195	10 / 80
34501132M	32	644	13.5	32.5	62.6	213	10 / 80
34501136M	36	762	13.5	32.5	64.8	213	10 / 80