

6435S

3/4" DR. 6 Point Inch Deep Impact Socket

- 6 pt. hexagon impact socket
- Material - chrome molybdenum alloy steel
- Finishing - phosphate sunk
- 3/4" drive
- 6 points
- Inch size
- ANSI/ASME B107.2

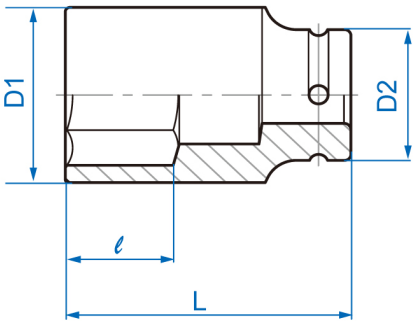

Item	inch	D1 mm	D2 mm	ℓ mm	L (mm)	g	
643524S	3/4	32	38	16	90	432	1 / 24
643526S	13/16	35	38	18	90	473	1 / 24
643528S	7/8	36	38	18	90	495	1 / 24
643530S	15/16	37	38	23	90	495	1 / 24
643532S	1	38	38	25	90	478	1 / 24

Item	inch	D1 mm	D2 mm	ℓ mm	L (mm)	g	
643534S	1-1/16	42	44	27	90	624	1 / 24
643536S	1-1/8	44.7	44	27	90	665	1 / 24
643538S	1-3/16	46	44	27	90	692	1 / 24
643540S	1-1/4	48	44	30	90	725	1 / 24
643542S	1-5/16	50	44	30	90	782	1 / 24
643544S	1-3/8	52	44	32	90	807	1 / 24
643546S	1-7/16	54	44	32	90	845	1 / 24
643548S	1-1/2	56	44	34	90	874	1 / 24
643550S	1-9/16	58	44	34	90	923	1 / 24
643552S	1-5/8	59	44	34	90	924	1 / 24
643554S	1-11/16	63.5	44	38	95	1181	1 / 10
643556S	1-3/4	64	44	38	95	1139	1 / 10
643558S	1-13/16	66	44	38	95	1212	1 / 10
643560S	1-7/8	68	54	40	95	1254	1 / 10
643562S	1-15/16	70	54	40	95	1256	1 / 10
643564S	2	72	54	40	95	1476	1 / 10