

6530M

3/4" DR. 12 Point Metric Standard Impact Socket

- 12 pt. bi-hex socket
- Material - chrome molybdenum alloy steel
- Finishing - phosphate sunk
- 3/4" drive
- 12 points
- Metric size
- DIN 3129, ISO 2725-2

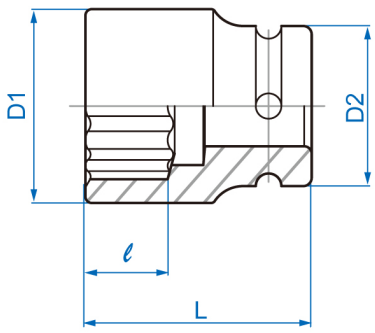

Item	mm	D1 mm	D2 mm	ℓ mm	L (mm)	g	
653017M	17	29.0	44	10	50	319	6 / 48
653019M	19	32.0	44	10	50	322	6 / 48
653021M	21	35.0	44	13	50	333	6 / 48
653022M	22	36.0	44	13	50	335	6 / 48
653023M	23	37.0	44	15	50	335	6 / 48

Item	○ mm	D1 mm	D2 mm	ℓ mm	L (mm)	g	
653024M	24	38.0	44	15	50	338	6 / 48
653026M	26	40.0	44	15	53	360	6 / 48
653027M	27	42.0	44	18	53	361	6 / 48
653028M	28	44.0	44	18	53	384	6 / 48
653029M	29	45.0	44	18	53	387	6 / 48
653030M	30	46.0	44	20	53	390	6 / 48
653032M	32	48.0	44	20	57	440	6 / 36
653033M	33	50.0	44	20	57	476	6 / 36
653034M	34	51.0	44	22	57	479	6 / 36
653035M	35	52.0	44	22	57	488	6 / 36
653036M	36	53.0	44	22	57	489	6 / 36
653038M	38	56.0	44	22	57	534	4 / 32
653040M	40	58.0	44	22	58	577	4 / 32
653041M	41	59.0	44	24	58	573	4 / 32
653042M	42	61.0	44	24	58	610	2 / 24
653046M	46	66.0	44	24	62	723	2 / 24
653063M	63	84.5	54	40	80	1352	1 / 12
653065M	65	86.5	54	43	80	1381	1 / 12
653070M	70	92.0	54	45	83	1445	1 / 12