

6515M

3/4" DR. 6 Point Metric Standard Impact Socket

- 6 pt. hexagon impact socket
- Material - chrome molybdenum alloy steel
- Finishing - phosphate sunk
- 3/4" drive
- Lightweight type
- 6 points
- Metric size
- DIN 3121

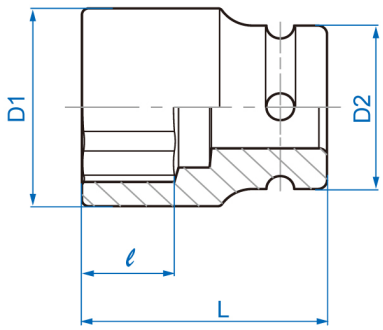

Item	mm	D1 mm	D2 mm	ℓ mm	L (mm)	g	
651514M	14	25.0	38	10	50	206	8 / 96
651515M	15	26.0	38	10	50	210	8 / 96
651516M	16	27.5	38	10	50	216	8 / 96
651517M	17	29.0	38	10	50	228	8 / 96

Item	mm	D1 mm	D2 mm	ℓ mm	L (mm)	g	
651518M	18	30.0	38	10	50	232	8 / 96
651519M	19	32.0	38	10	50	241	8 / 96
651521M	21	35.0	38	13	50	254	8 / 96
651522M	22	36.0	38	13	50	260	8 / 96
651523M	23	37.0	38	15	50	261	8 / 96
651524M	24	38.0	38	15	50	265	8 / 96
651525M	25	38.0	38	15	53	275	8 / 96
651526M	26	38.0	38	15	53	259	6 / 48
651527M	27	42.0	38	18	53	311	6 / 48
651528M	28	44.0	38	18	53	332	6 / 48
651529M	29	45.0	38	18	53	345	6 / 48
651530M	30	46.0	38	20	53	348	6 / 48