

4535M

1/2" DR. 6 Point Metric Standard Impact Socket

- 6 pt. hexagon impact socket
- Material - chrome molybdenum alloy steel
- Finishing - phosphate sunk
- 1/2" DR. standard length
- 6 points
- Metric size
- DIN 3129, ISO2725-2

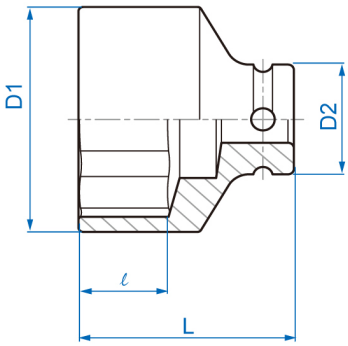

Item	mm	D1 mm	D2 mm	ℓ mm	L (mm)	g	
453508M	8	15.0	25	7	38	67	10 / 200
453509M	9	16.3	25	7	38	69	10 / 200
453510M	10	17.6	25	8	38	70	10 / 200
453511M	11	18.8	25	8	38	71	10 / 200
453512M	12	20.0	25	9	38	73	10 / 200

Item	⬡ mm	D1 mm	D2 mm	ℓ mm	L (mm)	g	
453513M	13	21.2	25	10	38	75	10 / 200
453514M	14	22.5	25	10	38	78	10 / 200
453515M	15	23.8	30	11	38	117	10 / 160
453516M	16	25.0	30	11	38	118	10 / 160
453517M	17	26.2	30	12	38	121	10 / 160
453518M	18	27.5	30	13	38	123	10 / 160
453519M	19	28.8	30	13	38	117	10 / 160
453520M	20	29.5	30	13	38	115	10 / 160
453521M	21	30.0	30	14	40	118	8 / 160
453522M	22	31.8	30	14	40	132	8 / 160
453523M	23	33.8	30	15	40	144	8 / 160
453524M	24	33.8	30	15	42	139	6 / 120
453525M	25	35.8	30	15	42	156	6 / 120
453526M	26	37.8	30	15	42	173	6 / 120
453527M	27	37.8	30	16	44	175	6 / 120
453528M	28	39.8	30	16	44	204	6 / 120
453529M	29	39.8	30	17	44	198	6 / 120
453530M	30	41.8	30.5	17	44	206	6 / 120
453532M	32	46.0	30	19	44	239	6 / 120
453533M	33	46.0	30	19	46	246	6 / 96
453534M	34	46.0	30	20	46	240	6 / 96

Item	⬡ mm	D1 mm	D2 mm	ℓ mm	L (mm)	g	
453535M	35	46.0	30	20	46	227	6 / 96
453536M	36	50.0	30	20	46	243	6 / 96
453537M	37	49.0	30	21	48	271	6 / 60
453538M	38	50.0	30	21	50	291	6 / 60
453539M	39	51.0	30	22	50	306	6 / 60
453541M	41	56.0	30	22	52	403	6 / 60
453546M	46	64.0	30	23	55	595	4 / 32