


# 8015M

## 1" DR. Impact Hex Bit Socket

- Material - chrome molybdenum alloy steel
- Finishing - phosphate sunk
- 1" impact hex bit socket
- DIN 3121

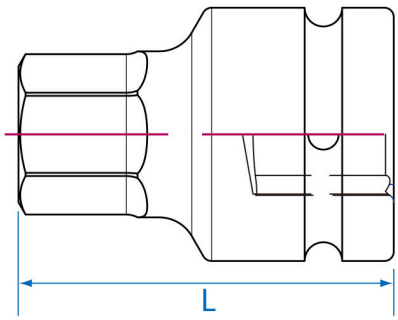


| Item | mm | Length (mm) | g | |
|---|---|---|---|---|
| 801519M | H19 | 80 | 656 | 1 / 24 |
| 801522M | H22 | 80 | 720 | 1 / 24 |
| 801524M | H24 | 80 | 741 | 1 / 24 |
| 801527M | H27 | 80 | 776 | 1 / 24 |
| 801530M | H30 | 80 | 820 | 1 / 24 |
| 801532M | H32 | 80 | 851 | 1 / 24 |
| 801536M | H36 | 80 | 921 | 1 / 24 |