

87446-3B-KR

3 Drawers Tool Trolley Cart

- 3 drawers roller cabinet, service cart, rolling tool cart, roll cart
- 3 drawers trolley
- 2 PC. protective mat for top and bottom shelves
- 3 PC. protective drawer liners

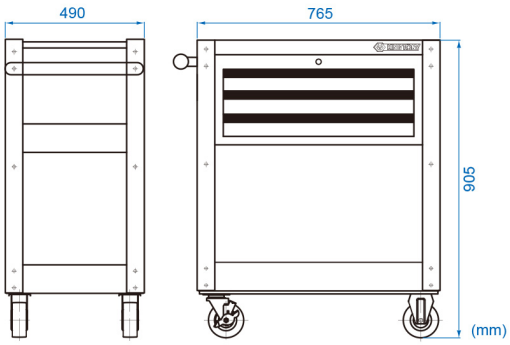



Item	SPEC.	Drawer Size (mm) Width x Depth x Height	Kg	Cuft
87446-3B-KR	Overall Overall + 5"x1 1/4" Casters 3 Drawer	765 x 490 x 760 765 x 490 x 905 576 x 380 x 75	38	13