

9TYT133

3T Low Profile Type Hydraulic Garage Jack

— Double pump design for fast operation

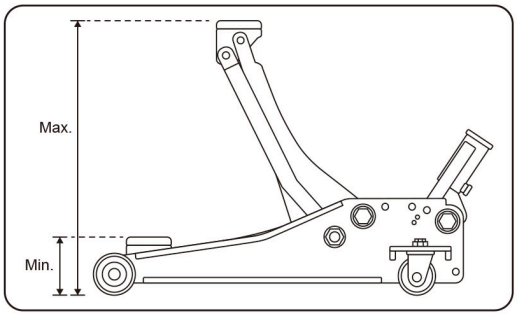

Item	Capacity (Ton)	Min Height (mm)	Max Height (mm)	N.W. (Kg)	Cuft
9TYT133-25A-B	2.5	75	505	32	2.16