

9TY231

Pneumatic Jack

— Pneumatic Jack

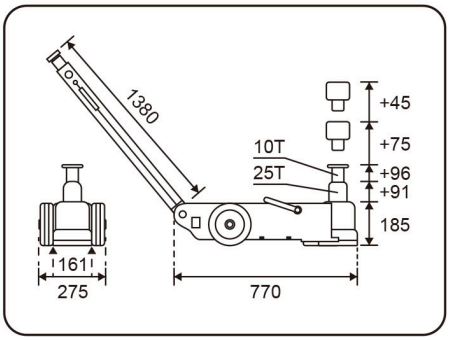

9TY231-25A-B

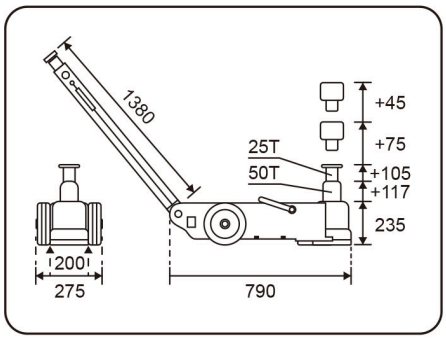

9TY231-50A-B

Item	Capacity (Ton)	Lifting Height (mm)	N.W. (Kg)	Cuft
9TY231-25A-B	25 10	25T: 91 10T: 96	63	1# 2.68 2# 1.34
9TY231-50A-B	50 25	50T: 117 25T: 105	85	1# 2.68 2# 1.34