

9BC24A

3 PC. Brake Caliper Piston Tool Set

- Designed for rewinding brake piston with right-handed thread
- Complete with reaction plate and double sided adapter
- Fast and easy to use, prevents damage to the piston and boot
- Fits most European and Japanese vehicles

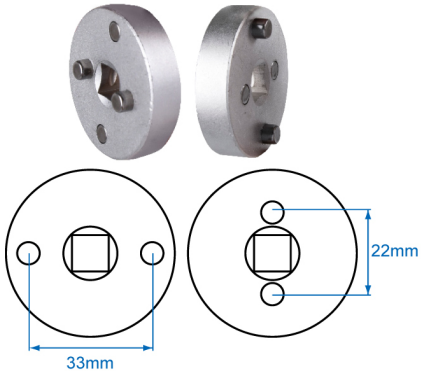

Item	A (mm)	B (mm)	Kg	
9BC24A	22	33	0.7	5 / 30