

9TY132A

3.5T Standard Type Hydraulic Garage Jack

— Foot pedal design for quick lift

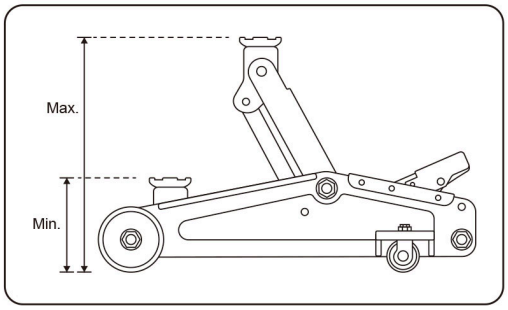

Item	Capacity (Ton)	Min Height (mm)	Max Height (mm)	N.W. (Kg)	Cuft
9TY132A-35A-B	3.5	145	500	37.2	1.99