

4506MR

6 PC. 1/2" DR. T-Spin Lug Wrench Set

- Fast spinning action extension wrench
- Reach deep area with soft grip handle
- Suitable for passenger vehicles

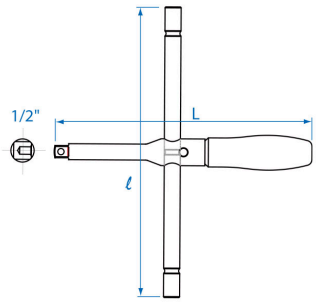





Item	■ inch	ℓ mm	L (mm)	Kg	
4506MR	1/2"	300	265	1.56	10



4335MR
17, 19, 21, 23

19980016



19980410

8740504