

4503MR01

4 PC. 1/2" DR. T-Spin Lug Wrench Set

- Fast spinning action extension wrench
- Reach deep area with soft grip handle
- Suitable for passenger vehicles

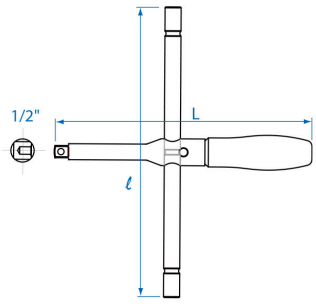





Item	■ inch	ℓ mm	L (mm)	Kg	
4503MR01	1/2"	300	265	1.36	12



4335MR
19, 21

19980016



19980410

8740503