

809622M

1" DR. impact bit holder 22 mm

- Heavy duty use, such like machinery
- Secured grub screw design ensures bits stay in place during heavy use
- Interchangeable impact bits are suitable for 22 mm hexagon socket
- Both of bit holder & interchangeable impact bit manufactured from chrome molybdenum alloy steel for impact strength with anti-corrosion black phosphate finish
- DIN 3121

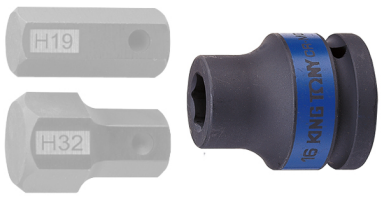

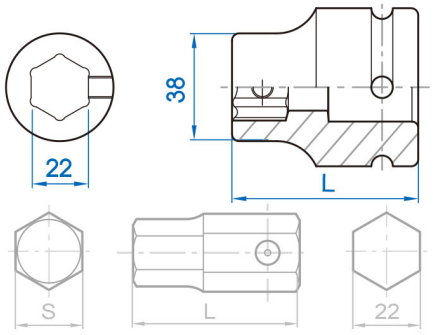

Item	S mm	mm	L (mm)	Max. Torq (Nm)	g	
809622M	-	22	58.0	-	547	1 / 24
195419H	H19	22	54.5	1577	140	12 / 120
195422H	H22	22	54.5	2436	162	12 / 120
195424H	H24	22	54.5	2436	176	10 / 100

Item	S mm	mm	L (mm)	Max. Torq (Nm)	g	
195427H	H27	22	54.5	2436	200	10 / 100
195430H	H30	22	54.5	2436	232	6 / 60
195432H	H32	22	54.5	2436	243	6 / 60