

4330MR

1/2" DR. 12 Point Metric Standard Socket

- 12 pt. bi-hex socket
- Chrome vanadium alloy steel
- polished, chrome plated
- 4 ball retaining grooves
- DIN 3124, ISO 2725-1

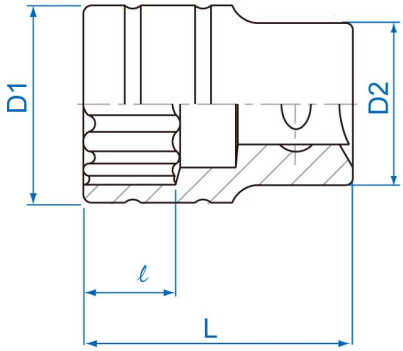

Item	mm	D1 mm	D2 mm	ℓ mm	L (mm)	g	
433010MR	10	15.0	23.3	8.0	38	51	10 / 200
433011MR	11	16.4	23.3	8.0	38	54	10 / 200
433012MR	12	17.8	23.3	9.0	38	54	10 / 200
433013MR	13	19.0	23.3	10.0	38	58	10 / 200
433014MR	14	20.4	23.3	11.0	38	60	10 / 200
433015MR	15	21.6	23.3	11.0	38	61	10 / 200

Item	○ mm	D1 mm	D2 mm	ℓ mm	L (mm)	g	
433016MR	16	22.5	23.3	11.0	38	61	10 / 200
433017MR	17	24.0	23.2	12.0	38	62	10 / 200
433018MR	18	25.2	23.2	13.0	38	69	10 / 200
433019MR	19	27.0	23.2	13.0	38	72	10 / 160
433020MR	20	27.9	23.2	14.0	38	74	10 / 160
433021MR	21	28.9	23.2	14.0	38	78	10 / 160
433022MR	22	30.2	24.0	14.0	40	90	10 / 160
433023MR	23	31.2	25.0	14.0	40	92	8 / 160
433024MR	24	32.1	26.0	16.0	42	101	8 / 160
433025MR	25	33.4	27.0	16.0	42	107	8 / 160
433026MR	26	35.0	28.0	17.0	42	125	6 / 120
433027MR	27	36.6	28.0	17.0	42	130	6 / 120
433028MR	28	37.8	30.0	17.0	42	142	6 / 120
433030MR	30	40.0	29.5	18.0	44	156	6 / 120
433032MR	32	42.5	30.0	18.0	44	163	6 / 120
433033MR	33	43.0	30.0	24.0	46	173	6 / 96
433034MR	34	45.0	30.0	24.0	46	207	6 / 96
433036MR	36	47.0	33.0	24.0	46	136	6 / 96