

9AT1202

Petrol & Diesel Engine Tensioner Adjustement Wrench (Via Water Pump) (VAUXHALL/OPEL)

- The set includes 41mm and 46mm tension adjust wrench
- Suitable for Vauxhall / Opel and Chevrolet engines

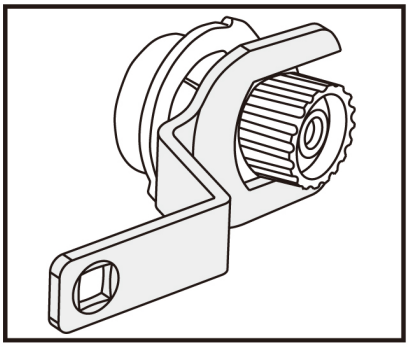



Item	MODEL	ENGINE CODE	g	
9AT1202	Vauxhall / Opel 9AT1202 - A(46MM) Petrol / 1.8 and 2.0 S.O.H.C Astra F, Calibra, Frontera Diesel / 1.6D and 1.7D Astra, Cavalier, Vectra 9AT1202 - B(41MM)	Vauxhall / Opel 9AT1202 - A(46MM) Petrol / 1.8 and 2.0 S.O.H.C C18NZ, C20NE Diesel / 1.6D and 1.7D 16DA, 17D 9AT1202 - B(41MM)	694.4	6 / 24

Item	MODEL	ENGINE CODE	g /
	Petrol / 1.2 / 1.4 / 1.6 S.O.H.C Corsa B / C , Combo, Astra-F, Vectra-B	Petrol / 1.2 / 1.4 / 1.6 S.O.H.C C12NE, X12SZ, C14NZ, X14NZ, C14SE, X14SZ, X16SZ, X16SZR, Z16SE	