

9AT1202

Petrol Engine Tension Adjustment Wrench (Via Water Pump) (CHEVROLET)

- The set includes 41mm and 46mm tension adjust wrench
- Suitable for Vauxhall / Opel and Chevrolet engines

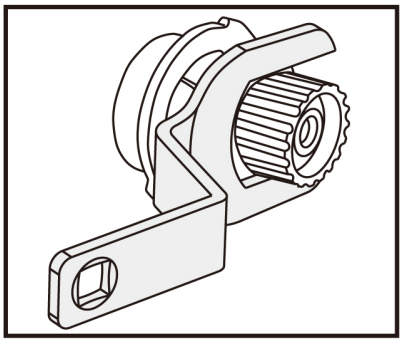



Item	MODEL	ENGINE CODE		
9AT1202	Chevrolet 9AT1202-B(41mm) Kalos (04-08), Aveo (06-08) Espero / Aranos (95-97), Nexia (95-97), Lanos (97-03), Nubira / Lacetti (97-09) Cruze (2009)	1.4 A13DM, A14MS, F14S3 1.4 16V. F14D3 1.5 G15MF 1.5 16V. A15DM, A15SMS, A15MF 1.6 16V. A16DM, A16DMS, F16D3, LXT	694.4	6 / 24



A
tension adjustment wrench (46mm)



B
tension adjustment wrench (41mm)