

409616M

1/2" DR. impact bit holder 16 mm

- Secured grub screw design ensures bits stay in place during heavy uses
- Interchangeable impact bits are suitable for 16mm hexagon socket
- Both of bit holder & interchangeable impact bit manufactured from chrome molybdenum alloy steel for impact strength with anti-corrosion black phosphate finish
- DIN 3121



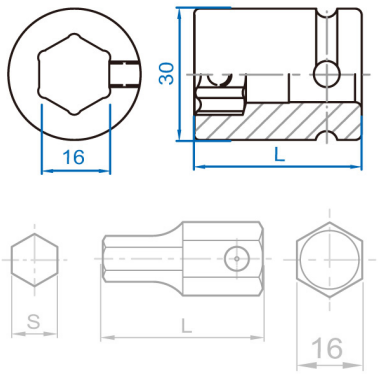

Item	S mm	mm	L (mm)	Max. Torq (Nm)	g	
409616M	-	16	38	680.0	145	10 / 160
174010H	H10	16	40	264.0	46	20 / 400
174012H	H12	16	40	480.0	52	20 / 400
174014H	H14	16	40	684.0	60	20 / 200

Item	S mm	mm	L (mm)	Max. Torq (Nm)	g	
174017H	H17	16	40	680.0	73	20 / 200
174019H	H19	16	40	680.0	80	20 / 200
174022H	H22	16	40	680.0	97	12 / 120