

4525M

1/2" DR. 6 Point Metric Stubby Impact Socket

- 6 pt. hexagon impact socket
- Material - chrome molybdenum alloy steel
- Finishing - phosphate sunk
- 1/2" DR. standard length
- 6 points
- Metric size
- For impact wrench (No.33431-050) use
- DIN 3129, ISO 2725-2

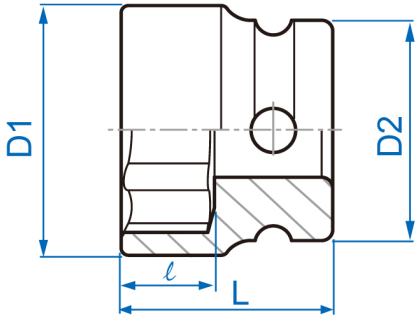

Item	mm	D1 mm	D2 mm	ℓ mm	L (mm)	g	
452513M	13	20	26	5.5	28.5	57	10 / 160
452514M	14	22	26	5.5	28.5	61	10 / 160
452517M	17	26	26	5.5	28.5	64	10 / 160
452519M	19	28	26	10	28.5	63	10 / 160

Item	⬡ mm	D1 mm	D2 mm	ℓ mm	L (mm)	g	
452521M	21	30	30	10	28.5	81	8 / 160
452522M	22	32	30	10	28.5	87	8 / 160
452524M	24	34	30	10	28.5	80	6 / 120