

345021S

9x12 Ring Insert Tool

- Chrome-plated
- Ring Insert tool

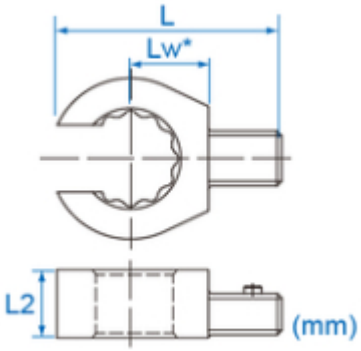

Item	Size	Maximum Torque Nm	L2	Lw* (mm)	L (mm)	g	
34502108S	1/4	26	8.0	17.5	39.8	38	12 / 288
34502110S	5/16	35	8.0	17.5	40.5	37	12 / 288
34502112S	3/8	60	8.0	17.5	41.6	42	12 / 288
34502114S	7/16	73	8.0	17.5	43.3	42	12 / 288
34502116S	1/2	108	12.0	17.5	44.5	52	12 / 288
34502118S	9/16	152	12.0	17.5	45.2	53	12 / 288
34502120S	5/8	175	13.0	17.5	46.3	58	12 / 288

Item	Size	Maximum Torque Nm	L2	Lw* (mm)	L (mm)	g	
34502122S	11/16	202	13.0	17.5	47	62	12 / 192
34502124S	3/4	262	13.0	17.5	49.2	65	12 / 192
34502126S	13/16	330	14.7	17.5	50.3	72	12 / 192
34502128S	7/8	360	14.7	17.5	51.2	70	12 / 192