

A535S

Dado de Impacto de 6 Puntos Estándar en Pulgadas de 2-1/2" DR.

- Dado de impacto de 6 pt. hexagonal
- Material - acero de aleación al cromo molibdeno
- Acabado - fosfatado
- Engranaje de 2-1/2"
- 6 puntos
- Tamaño en pulgadas
- ANSI/ASME B107.1

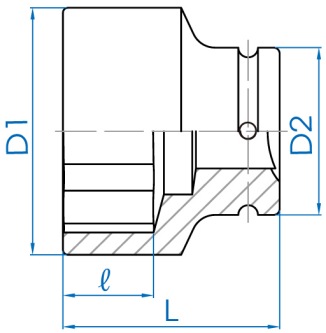

Item	mm	D1 mm	D2 mm	ℓ mm	L (mm)	g	
A535076S	2-3/8	100	127	45	125	6892	1 / 2
A535078S	2-7/16	103	127	45	125	6937	1 / 2
A535080S	2-1/2	103	127	48	125	6855	1 / 2

Item	⬡ mm	D1 mm	D2 mm	ℓ mm	L (mm)	g	📦/📦
A535082S	2-9/16	105	127	48	125	6901	1 / 2
A535084S	2-5/8	107	127	50	125	6944	1 / 2
A535088S	2-3/4	110	127	50	125	6935	1 / 2
A535090S	2-13/16	115	127	50	125	7046	1 / 2
A535094S	2-15/16	115	127	55	125	7165	1 / 2
A535096S	3	120	127	55	125	7203	1 / 2
A535100S	3-1/8	123	127	57	125	7262	1 / 2
A535108S	3-3/8	127	127	60	130	7486	1 / 2
A535112S	3-1/2	135	127	65	130	7988	1 / 2
A535120S	3-3/4	140	127	70	140	8561	1 / 2
A535124S	3-7/8	145	127	70	140	8651	1 / 2
A535126S	3-15/16	145	127	70	140	8767	1 / 2
A535132S	4-1/8	155	127	70	142	9910	1 / 2
A535136S	4-1/4	160	127	75	155	11749	1 / 2
A535138S	4-5/16	165	127	75	155	12526	1 / 2
A535144S	4-1/2	167	127	78	155	12614	1 / 2
A535148S	4-5/8	175	175	80	160	19181	1 / 1
A535156S	4-7/8	185	175	82	165	19876	1 / 1
A535160S	5	183	175	82	165	20029	1 / 1
A535164S	5-1/8	185	175	85	170	20425	1 / 1
A535168S	5-1/4	190	175	90	175	21817	1 / 1

Item	mm	D1 mm	D2 mm	ℓ mm	L (mm)	g	
A535172S	5-3/8	200	175	95	180	23903	1 / 1
A535180S	5-5/8	205	175	95	183	24439	1 / 1
A535184S	5-3/4	205	175	95	183	26303	1 / 1
A535188S	5-7/8	210	175	100	190	26627	1 / 1
A535192S	6	215	175	100	195	29105	1 / 1
A535196S	6-1/8	220	175	100	195	28695	1 / 1
A535200S	6-1/4	220	175	100	195	28581	1 / 1
A535204S	6-3/8	225	175	100	200	30775	1 / 1
A535208S	6-1/2	230	175	105	205	31057	1 / 1
A535212S	6-5/8	235	175	105	205	32173	1 / 1
A535216S	6-3/4	235	175	105	205	33688	1 / 1
A535220S	6-7/8	240	175	110	210	32414	1 / 1
A535224S	7	245	175	110	210	35530	1 / 1
A535240S	7-1/2	260	175	115	220	41160	1 / 1
A535244S	7-5/8	265	175	115	220	41527	1 / 1
A535252S	7-7/8	275	175	120	225	44463	1 / 1
A535256S	8	280	175	120	230	45898	1 / 1
	(	According	to	order	)		