

8435S

1" DR. 英制六角气动长套筒

- 铬钼合金钢
- 表面处理：磷酸锰
- 依据 ANSI/ASME B107.1

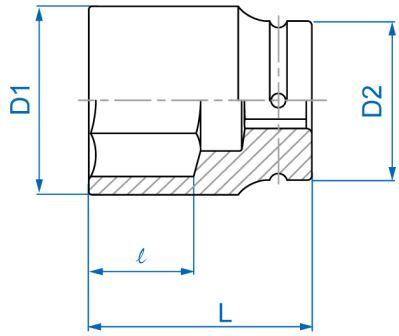

Item	inch	D1 mm	D2 mm	ℓ mm	L (mm)	g	
843530S	15/16	40.8	54	25	90	872	1 / 24
843532S	1	42	54	25	90	847	1 / 24
843534S	1-1/16	44	54	25	90	868	1 / 24
843536S	1-1/8	46.3	54	25	90	911	1 / 24
843538S	1-3/16	48	54	28	90	926	1 / 24
843540S	1-1/4	51	54	28	90	980	1 / 24
843542S	1-5/16	52	54	28	92	1010	1 / 24
843544S	1-3/8	54	54	28	92	1022	1 / 24

Item	inch	D1 mm	D2 mm	ℓ mm	L (mm)	g	
843546S	1-7/16	56	54	32	92	1017	1 / 24
843548S	1-1/2	58	54	32	92	1048	1 / 24
843550S	1-9/16	60	54	32	92	1096	1 / 24
843552S	1-5/8	61	54	32	92	1097	1 / 24
843554S	1-11/16	64	54	32	92	1211	1 / 24
843556S	1-3/4	67	54	32	92	1312	1 / 12
843558S	1-13/16	68	54	35	95	1322	1 / 12
843560S	1-7/8	70	54	35	95	1382	1 / 6
843562S	1-15/16	72	54	35	95	1450	1 / 6
843564S	2	74	54	35	95	1510	1 / 6
843566S	2-1/16	75	54	40	100	1589	1 / 6
843568S	2-1/8	78	54	40	100	1729	1 / 6
843570S	2-3/16	79	54	40	100	1646	1 / 6
843572S	2-1/4	82	54	42	100	1837	1 / 6