

8535S

1" DR. 英制六角气动标准套筒

- 铬钼合金钢
- 表面处理：磷酸锰
- 依据 ANSI/ASME B107.2

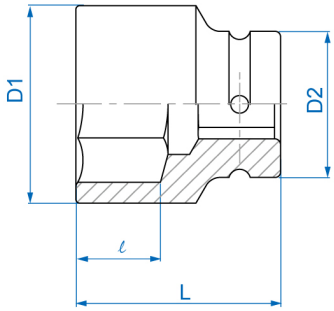

Item	inch	D1 mm	D2 mm	ℓ mm	L (mm)	g	
853524S	3/4	35	54	15	58	528	1 / 24
853526S	13/16	37	54	15	58	548	1 / 24
853528S	7/8	38	54	15	58	538	1 / 24
853530S	15/16	41	54	17	58	568	1 / 24
853532S	1	42	54	17	58	559	1 / 24
853534S	1-1/16	44	54	19	58	566	1 / 24
853536S	1-1/8	47	54	19	58	586	1 / 24
853538S	1-3/16	48	54	20	60	600	1 / 24

Item	inch	D1 mm	D2 mm	ℓ mm	L (mm)	g	
853540S	1-1/4	51	54	20	62	659	1 / 24
853542S	1-5/16	52	54	20	62	660	1 / 24
853544S	1-3/8	54	54	20	62	660	1 / 24
853546S	1-7/16	56	54	20	65	713	1 / 24
853548S	1-1/2	58	54	22	65	728	1 / 24
853550S	1-9/16	60	54	22	65	758	1 / 24
853552S	1-5/8	61	54	22	70	822	1 / 24
853554S	1-11/16	64	54	22	70	886	1 / 20
853556S	1-3/4	67	54	26	70	968	1 / 20
853558S	1-13/16	68	54	26	75	1075	1 / 20
853560S	1-7/8	70	54	26	75	1057	1 / 20
853562S	1-15/16	72	54	26	75	1100	1 / 20
853564S	2	74	54	30	75	1170	1 / 20
853566S	2-1/16	75	54	30	80	1225	1 / 12
853568S	2-1/8	78	54	30	80	1355	1 / 12
853570S	2-3/16	79	54	32	83	1423	1 / 12
853572S	2-1/4	82	54	32	83	1486	1 / 12
853574S	2-5/16	83	54	32	83	1459	1 / 12
853576S	2-3/8	86	54	32	87	1681	1 / 12
853578S	2-7/16	88	54	34	87	1681	1 / 12
853580S	2-1/2	90	54	34	87	1704	1 / 12

Item	inch	D1 mm	D2 mm	ℓ mm	L (mm)	g	
853582S	2-9/16	92	54	34	90	1881	1 / 12
853584S	2-5/8	94	54	34	90	1795	1 / 12
853586S	2-11/16	95	54	34	90	1931	1 / 12
853588S	2-3/4	97	54	34	93	2114	1 / 8
853590S	2-13/16	99	86	36	93	2869	1 / 8
853592S	2-7/8	102	86	36	93	2997	1 / 8
853594S	2-15/16	104	86	36	95	3161	1 / 8
853596S	3	106	86	36	95	3279	1 / 8
8535A0S	3-1/8	110	86	43	95	3386	1 / 4
8535A4S	3-1/4	112	86	43	95	3342	1 / 4
8535A8S	3-3/8	117	86	43	100	3873	1 / 4
8535B2S	3-1/2	122	86	43	100	4148	1 / 4