

8535M

1" DR. 公制六角气动标准套筒

- 铬钼合金钢
- 表面处理：磷酸锰
- 依据 DIN 3129, ISO 2725-2

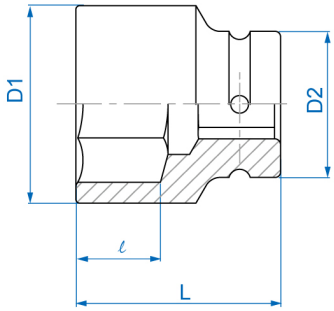

Item	mm	D1 mm	D2 mm	ℓ mm	L (mm)	g	
853519M	19	35	54	15	58	508	1 / 24
853521M	21	37	54	15	58	537	1 / 24
853522M	22	38	54	15	58	548	1 / 24
853523M	23	39	54	17	58	544	1 / 24
853524M	24	41	54	17	58	562	1 / 24
853525M	25	42	54	17	58	562	1 / 24
853526M	26	43	54	19	58	564	1 / 24
853527M	27	44	54	19	58	565	1 / 24

Item	mm	D1 mm	D2 mm	ℓ mm	L (mm)	g	
853528M	28	45	54	19	58	570	1 / 24
853529M	29	47	54	19	58	591	1 / 24
853530M	30	48	54	20	60	592	1 / 24
853532M	32	51	54	20	62	647	1 / 24
853533M	33	52	54	20	62	662	1 / 24
853534M	34	53	54	20	62	665	1 / 24
853535M	35	54	54	20	62	665	1 / 24
853536M	36	56	54	20	65	721	1 / 24
853538M	38	58	54	22	65	733	1 / 24
853540M	40	60	54	22	65	758	1 / 24
853541M	41	61	54	22	70	824	1 / 24
853542M	42	64	54	22	70	905	1 / 20
853544M	44	67	54	26	70	978	1 / 20
853546M	46	68	54	26	75	1033	1 / 20
853548M	48	70	54	26	75	1061	1 / 20
853550M	50	73	54	26	75	1170	1 / 20
853552M	52	75	54	30	80	1244	1 / 12
853553M	53	76	54	30	80	1278	1 / 12
853554M	54	78	54	30	80	1351	1 / 12
853555M	55	79	54	32	83	1435	1 / 12
853558M	58	83	54	32	83	1514	1 / 12

Item	⬡ mm	D1 mm	D2 mm	ℓ mm	L (mm)	g	
853560M	60	86	54	32	87	1693	1 / 12
853563M	63	90	54	34	87	1750	1 / 12
853565M	65	92	54	34	90	1750	1 / 12
853566M	66	94	54	34	90	1889	1 / 12
853568M	68	95	54	34	90	1963	1 / 12
853570M	70	97	54	34	93	2036	1 / 8
853571M	71	99	86	36	93	2917	1 / 8
853575M	75	104	86	36	95	3120	1 / 8
853580M	80	110	86	43	95	3387	1 / 4
853585M	85	115	86	43	95	3532	1 / 4
853590M	90	122	86	43	100	4005	1 / 4
853595M	95	130	95	52	105	4924	1 / 2
8535A0M	100	136	95	51	105	4972	1 / 2