

4535S

1/2" DR. 英制六角气动标准套筒

- 铬钼合金钢
- 表面处理：磷酸锰
- 依据ANSI/ASME B107.2

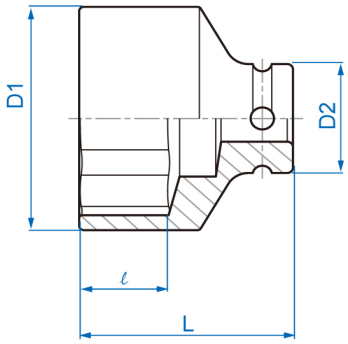

Item	inch	D1 mm	D2 mm	ℓ mm	L (mm)	g	
453510S	5/16	14	25	7	38	66	10 / 200
453512S	3/8	17	25	7	38	70	10 / 200
453514S	7/16	18	25	8	38	70	10 / 200
453516S	1/2	20	25	10	38	72	10 / 200
453518S	9/16	22	25	10	38	77	10 / 200
453520S	5/8	24	25	11	38	80	10 / 160
453522S	11/16	26	30	12	38	116	10 / 160

Item	inch	D1 mm	D2 mm	ℓ mm	L (mm)	g	
453524S	3/4	28	30	13	38	116	10 / 160
453526S	13/16	30	30	14	40	127	8 / 160
453528S	7/8	32	30	14	40	136	8 / 160
453530S	15/16	34	30	15	42	152	6 / 120
453532S	1	36	30	15	42	164	6 / 120
453534S	1-1/16	38	30	16	44	180	6 / 120
453536S	1-1/8	41	30	17	44	199	6 / 120
453538S	1-3/16	42	30.5	17	44	208	6 / 120
453540S	1-1/4	46	30	18	44	237	6 / 120