

B535S

3-1/2" DR. 英制六角氣動標準套筒

- 铬钼合金钢
- 表面处理：磷酸锰
- 依据ANSI/ASME B107.1

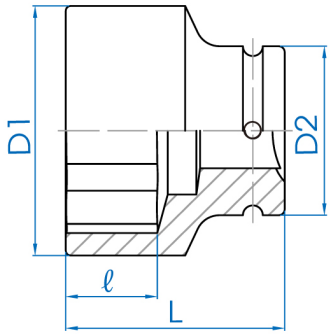

Item	mm	D1 mm	D2 mm	ℓ mm	L (mm)	g	
B535132S	4-1/8	165	175	70	175	18749	1 / 1
B535136S	4-1/4	168	175	75	175	19087	1 / 1
B535140S	4-3/8	170	175	75	175	19742	1 / 1
B535144S	4-1/2	175	175	78	180	19725	1 / 1
B535148S	4-5/8	175	175	80	180	19957	1 / 1
B535152S	4-3/4	180	175	80	185	20142	1 / 1
B535156S	4-7/8	185	175	82	185	22040	1 / 1

Item	mm	D1 mm	D2 mm	ℓ mm	L (mm)	g	
B535160S	5	190	175	82	194	21593	1 / 1
B535164S	5-1/8	190	175	85	194	22640	1 / 1
B535168S	5-1/4	200	175	90	200	23594	1 / 1
B535172S	5-3/8	200	175	95	200	24645	1 / 1
B535176S	5-1/2	205	175	95	205	25572	1 / 1
B535180S	5-5/8	210	175	95	205	30530	1 / 1
B535184S	5-3/4	210	200	95	210	31925	1 / 1
B535188S	5-7/8	215	200	100	210	32509	1 / 1
B535192S	6	220	200	100	215	33432	1 / 1
B535196S	6-1/8	220	200	100	215	34281	1 / 1
B535200S	6-1/4	230	200	100	220	35136	1 / 1
B535204S	6-3/8	230	200	100	220	36511	1 / 1
B535208S	6-1/2	235	200	105	224	37769	1 / 1
B535212S	6-5/8	235	200	105	224	37989	1 / 1
B535216S	6-3/4	240	200	105	225	38706	1 / 1
B535220S	6-7/8	245	200	110	230	39875	1 / 1
B535224S	7	250	200	110	230	41995	1 / 1
B535228S	7-1/8	255	200	110	230	44245	1 / 1
B535232S	7-1/4	260	200	110	235	46618	1 / 1
B535236S	7-3/8	270	200	115	240	48119	1 / 1
B535240S	7-1/2	270	200	115	240	50657	1 / 1

Item	⬡ mm	D1 mm	D2 mm	ℓ mm	L (mm)	g	📦/📦
B535244S	7-5/8	275	200	115	240	51494	1 / 1
B535248S	7-3/4	280	200	120	245	52113	1 / 1
B535252S	7-7/8	280	200	120	245	53592	1 / 1
B535256S	8	285	200	120	245	55599	1 / 1
B535260S	8-1/8	290	200	120	250	56258	1 / 1
B535264S	8-1/4	290	200	125	250	57502	1 / 1
B535268S	8-3/8	300	200	125	250	59140	1 / 1
B535272S	8-1/2	300	200	125	250	59438	1 / 1
B535276S	8-5/8	305	200	135	260	61945	1 / 1
B535280S	8-3/4	310	200	135	265	64583	1 / 1
B535284S	8-7/8	315	200	140	267	66142	1 / 1
	(	According	to	order	)		