

# A535M

## 2-1/2" DR. 公制六角气动标准套筒

- 铬钼合金钢
- 表面处理：磷酸锰
- 依据DIN 3129

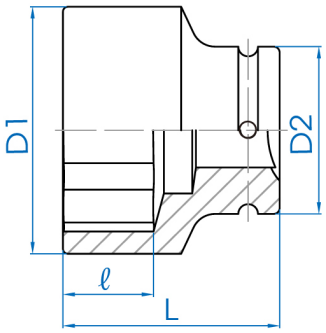


| Item | mm | D1 mm | D2 mm | ℓ mm | L (mm) | g | |
|---|---|---|---|---|---|---|---|
| A535041M | 41 | 78 | 127 | 39 | 115 | 5985 | 1 / 4 |
| A535046M | 46 | 83 | 127 | 39 | 115 | 5971 | 1/ 4 |
| A535050M | 50 | 88 | 127 | 39 | 115 | 6050 | 1/ 4 |
| A535051M | 51 | 89 | 127 | 39 | 115 | 6064 | 1/ 4 |
| A535055M | 55 | 94 | 127 | 42 | 115 | 6148 | 1/ 4 |
| A535057M | 57 | 96 | 127 | 42 | 115 | 6180 | 1/ 4 |
| A535060M | 60 | 100 | 127 | 45 | 125 | 6878 | 1 / 2 |

| Item | ⬡ mm | D1 mm | D2 mm | ℓ mm | L (mm) | g | |
|---|---|---|---|---|---|---|---|
| A535065M | 65 | 105 | 127 | 48 | 125 | 6901 | 1 / 2 |
| A535070M | 70 | 110 | 127 | 50 | 125 | 6933 | 1 / 2 |
| A535075M | 75 | 115 | 127 | 55 | 125 | 7148 | 1 / 2 |
| A535076M | 76 | 120 | 127 | 55 | 125 | 7143 | 1 / 2 |
| A535077M | 77 | 120 | 127 | 55 | 125 | 7156 | 1 / 2 |
| A535080M | 80 | 123 | 127 | 57 | 125 | 7229 | 1 / 2 |
| A535085M | 85 | 127 | 127 | 60 | 130 | 7549 | 1 / 2 |
| A535086M | 86 | 127 | 127 | 60 | 130 | 7470 | 1 / 2 |
| A535090M | 90 | 135 | 127 | 65 | 130 | 7906 | 1 / 2 |
| A535095M | 95 | 140 | 127 | 70 | 140 | 8614 | 1 / 2 |
| A535100M | 100 | 145 | 127 | 70 | 140 | 8815 | 1 / 2 |
| A535105M | 105 | 155 | 127 | 70 | 142 | 10189 | 1 / 2 |
| A535110M | 110 | 160 | 127 | 76 | 155 | 11511 | 1 / 2 |
| A535115M | 115 | 165 | 127 | 78 | 155 | 18390 | 1 / 1 |
| A535120M | 120 | 175 | 175 | 80 | 160 | 13180 | 1 / 1 |
| A535125M | 125 | 180 | 175 | 82 | 165 | 19874 | 1 / 1 |
| A535130M | 130 | 185 | 175 | 85 | 170 | 20649 | 1 / 1 |
| A535135M | 135 | 190 | 175 | 90 | 175 | 21751 | 1 / 1 |
| A535140M | 140 | 200 | 175 | 95 | 180 | 24066 | 1 / 1 |
| A535145M | 145 | 205 | 175 | 95 | 183 | 24961 | 1 / 1 |
| A535150M | 150 | 210 | 175 | 100 | 190 | 26918 | 1 / 1 |

| Item | mm | D1 mm | D2 mm | ℓ mm | L (mm) | g | |
|---|---|---|---|---|---|---|---|
| A535155M | 155 | 215 | 175 | 100 | 195 | 27998 | 1 / 1 |
| A535160M | 160 | 225 | 175 | 100 | 200 | 31132 | 1 / 1 |
| A535165M | 165 | 230 | 175 | 105 | 205 | 32455 | 1 / 1 |
| A535170M | 170 | 235 | 175 | 105 | 205 | 33150 | 1 / 1 |
| A535175M | 175 | 240 | 175 | 110 | 210 | 34520 | 1 / 1 |
| A535180M | 180 | 250 | 175 | 110 | 213 | 38239 | 1 / 1 |
| A535185M | 185 | 255 | 175 | 110 | 213 | 39849 | 1 / 1 |
| A535190M | 190 | 265 | 175 | 115 | 220 | 41491 | 1 / 1 |
| A535200M | 200 | 275 | 175 | 120 | 225 | 44442 | 1 / 1 |
| A535210M | 210 | 285 | 175 | 125 | 235 | 48784 | 1 / 1 |
| A535215M | 215 | 290 | 175 | 125 | 240 | 51218 | 1 / 1 |
| A535225M | 225 | 305 | 175 | 135 | 250 | 57571 | 1 / 1 |
| A535235M | 235 | 315 | 175 | 140 | 260 | 62922 | 1 / 1 |
| | ( | According | to | order | ) | | |