

4335SR

1/2" DR. 英制六角标准套筒

- 铬钒合金钢，抛光，镀铬
- 4球槽定位功能
- 依据 ANSI/ASME B107.1

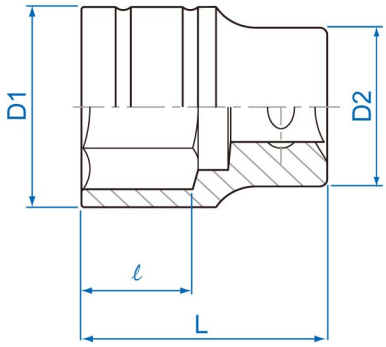

Item	inch	D1 mm	D2 mm	ℓ mm	L (mm)	g	
433510SR	5/16	13.2	21.8	7.0	38	44	10 / 200
433512SR	3/8	15.0	21.8	7.0	38	45	10 / 200
433514SR	7/16	16.4	23.3	8.0	38	54	10 / 200
433515SR	15/32	18.0	23.3	8.0	38	56	10 / 200
433516SR	1/2	19.0	23.3	10.0	38	58	10 / 200
433518SR	9/16	20.4	23.3	11.0	38	59	10 / 200
433519SR	19/32	21.6	23.3	11.0	38	61	10 / 200
433520SR	5/8	22.5	23.3	11.0	38	62	10 / 200

Item	inch	D1 mm	D2 mm	ℓ mm	L (mm)	g	
433522SR	11/16	24.0	23.2	12.0	38	62	10 / 200
433524SR	3/4	27.0	23.2	13.0	38	75	10 / 160
433525SR	25/32	28.0	23.2	14.0	38	77	10 / 160
433526SR	13/16	28.6	23.2	14.0	38	80	10 / 160
433528SR	7/8	30.2	24.0	14.0	40	92	10 / 160
433530SR	15/16	32.6	26.0	16.0	42	113	8 / 160
433532SR	1	34.8	26.8	16.0	42	124	8 / 160
433534SR	1-1/16	36.6	28.0	17.0	42	138	6 / 120
433536SR	1-1/8	39.0	30.0	17.0	44	166	6 / 120
433538SR	1-3/16	40.0	29.5	18.0	44	168	6 / 120
433540SR	1-1/4	42.5	30.0	18.0	44	176	6 / 120