

9-90145CRV

45件式 螺丝起子&复合扳手工具箱组套(EVA底盘)

- 使用 #3 底盘 (554 x 260mm)
- 适用 B2 抽屉空间(572x275mm)

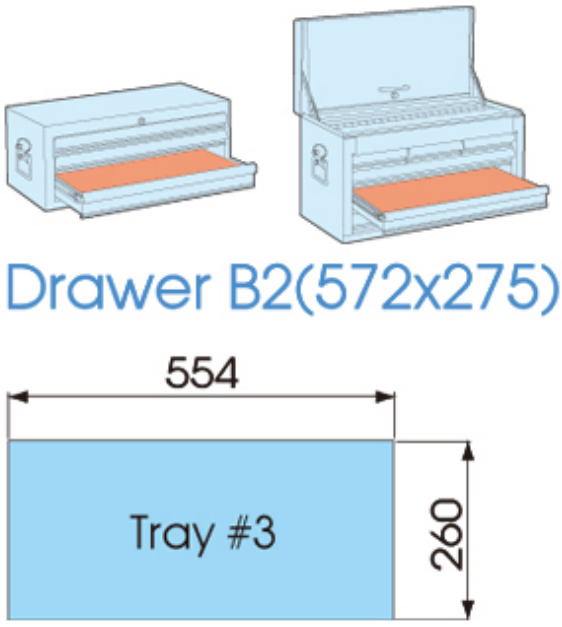

Item	Kg	
9-90145CRV	4.04	1 / 3



1025H
H3, H4, H5, H6



1025P
PH1, PH2 x 2, PH3



1025S
3.0, 4.0, 5.0, 6.0



1025T
T10, T15, T20, T25, T27, T30, T40



1025U
T10H, T15H, T20H, T25H, T27H, T30H, T40H



1025Z
PZ1, PZ2 x 2, PZ3



1060
27, 30, 32



1481
PH1 x 75, PH2 x 100, PH3 x 150



1482
5.5x75, 6.5x100, 8x150



5060
1-1/16, 1-1/8, 1-1/4



2141



753-63



7702-25